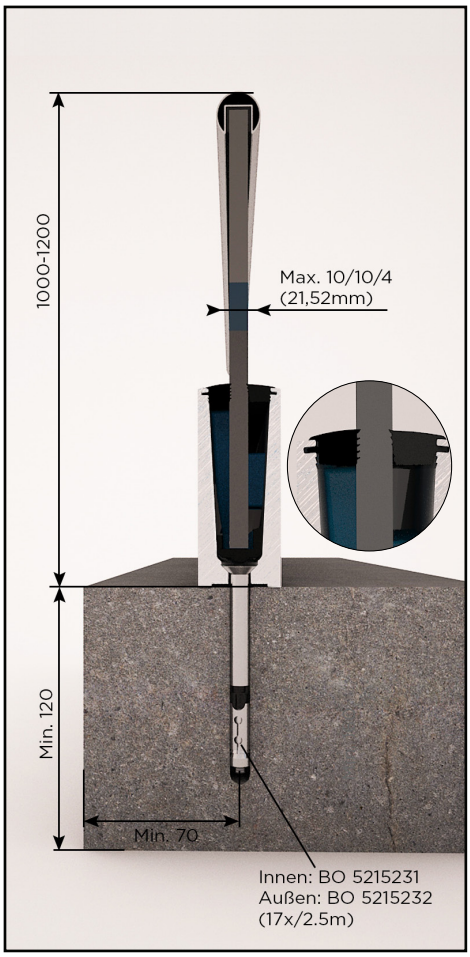
1000-1200
Max. 10/10/4
(21,52mm)
Min. 120
Min. 70
Innen: BO 5215231
Außen: BO 5215232
(17x/2.5m)

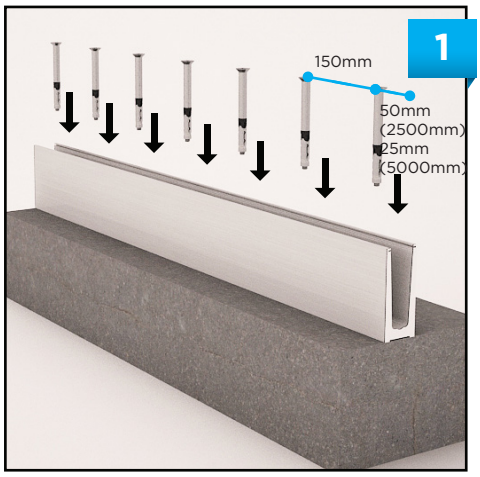
1
150mm
50mm
(2500mm)
25mm
(5000mm)

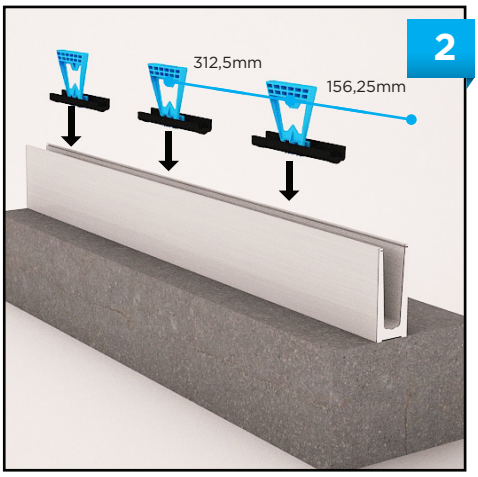
2
312,5mm
156,25mm

3

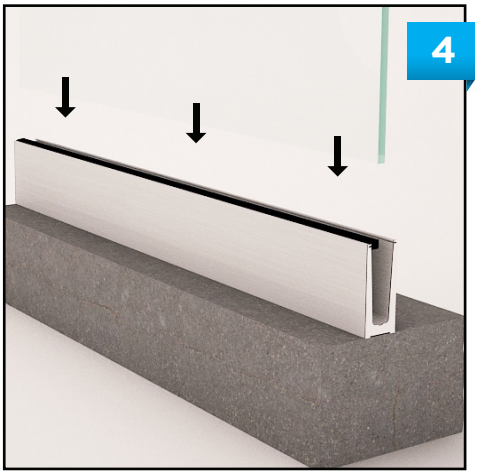
4

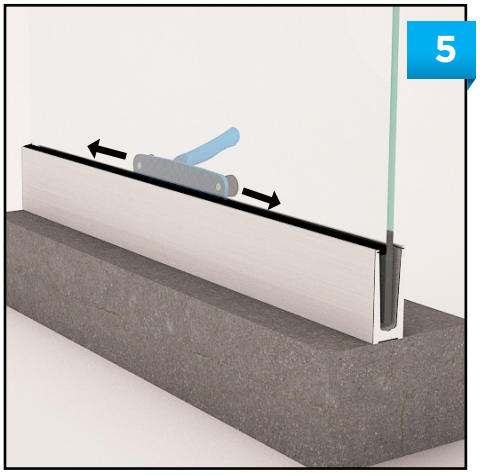
5

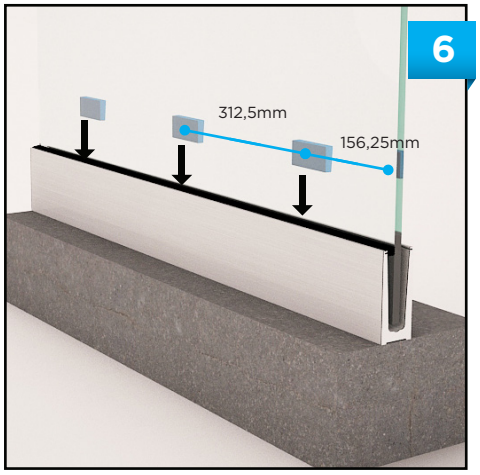
6
312,5mm
156,25mm

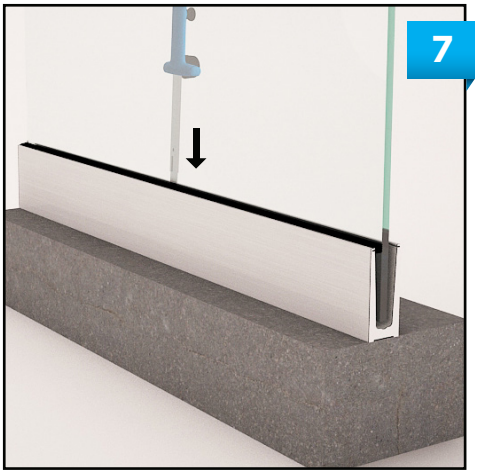
7

8

✔