Wood's

Powr-Grip® Lifting System

BO W7A1

1 suction pad
70 kg

Specifications

- ✓ Ideally suited for transport and installation in limited space conditions
- ✓ Compact, sturdy construction
- ✓ For use in workshops
- ✓ High holding capacity
- ✓ Independent of power supply
- ✓ For small to medium glass sizes

Technical Data

Wood´s Powr-Grip® Lifting System

Description	The Powr-Grip® lifting system MT1HV11DC is suitable for use with cranes or other lifting equipment. The load is held by vacuum. The lifting system can be tilted manually by 90°.
Suction pads	One suction pad made of rubber, shore hardness 55, with filter, 25 cm diameter, flat with lips.
Holding capacity	Calculated at -54 kPa on clean, flat, non-porous surface
Per suction pad	70 kg
Max.	70 kg
Weight of lifting unit	19 kg
Operating power	12 volts DC, 10 amps
Battery capacity	7 Ah
Rotating range	-
Swiveling range	90° manual
Vacuum pump	Membrane pump, 28 l/min.
Vacuum tank	Large vacuum tank prevents an immediate vacuum loss, extends pumping intervals and therefore increases the life time of the battery.
Vacuum indication	The level of the vacuum is indicated on a scale of negative kPa
Warning of vacuum loss	A red warning lamp as well as a buzzer are activated until a sufficient vacuum level has been reached (higher than -54 kPa) which is necessary to lift the maximum load as well as when the pump is in operation to generate a higher vacuum during the lifting process.
Max. operating altitude	1.800 m ASL
Working temperatures	From 0° to +40° C
Life time	This lifting system has been constructed for a minimum of 20.000 cycles when used and maintained as intended. Exempted are suction pads, filter elements and other wear parts.
Art. No.	BO W7A1

Dimensions:

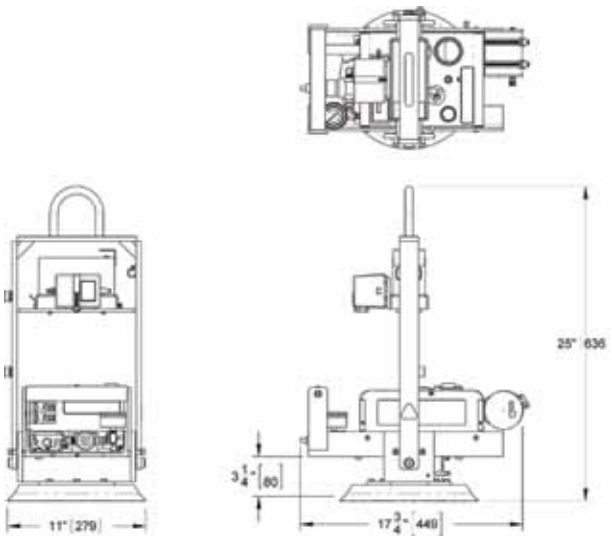

Technical features are subject to change!